KALLER®

Chapter

2

Power Line - Heavy Duty

TX 1000 to TX 9500

KALLER

Power Line - Heavy Duty, TX 1000 to TX 9500

Our new TX series is a crossover between our ISO standard TU series and our Power Line X series. TX springs combine the high forces of the X springs with the outer dimensions and stroke lengths of the TU springs.

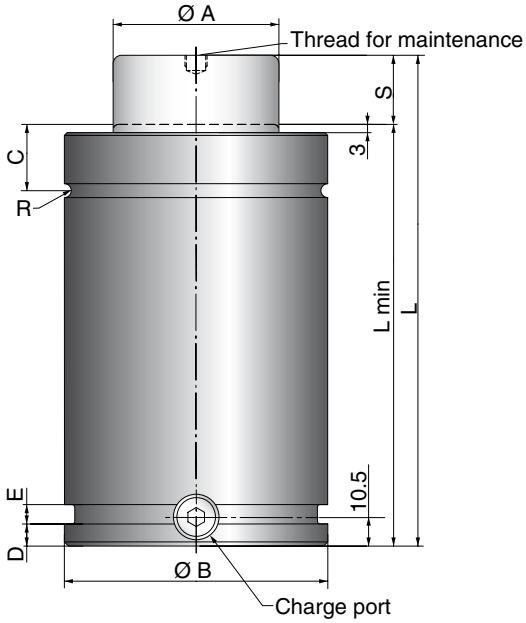

Safety Features

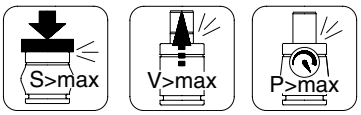

Reliability Features

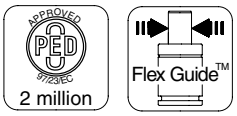

Additional information at www.kaller.com\FAQ

Performance and Design Features

- Initial forces from 1000 to 9500 daN
- Side or bottom charging ports for Link-system connection.
- Upper C-groove, lower U-groove and bottom threaded holes allow for various standard mounting possibilities.
- Optional bottom port for hose/base plate connection

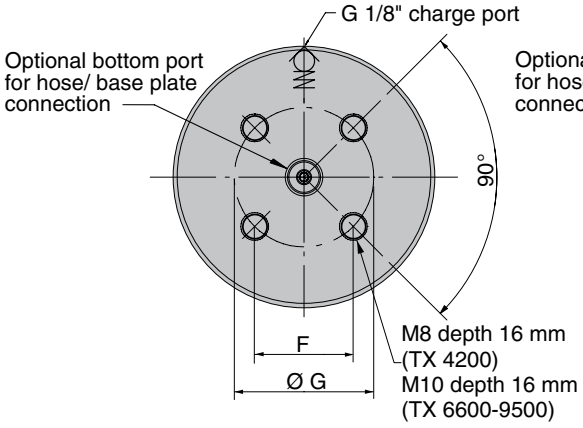

TX 4200 to TX 9500

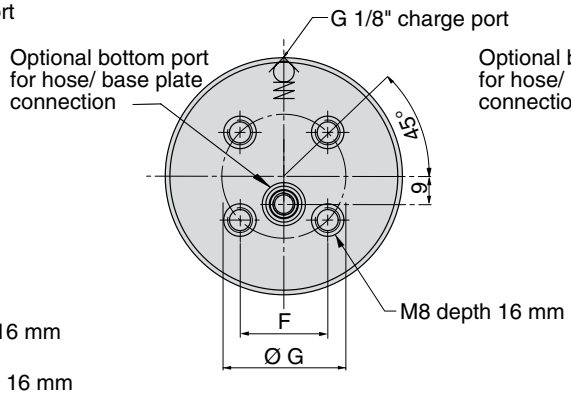

TX 2400

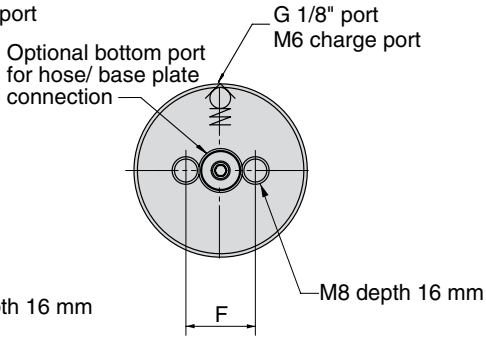

TX 1000

Model	Spring force in N at 150 bar/ + 20° C		Ø A	Ø B	C	D	E	F	Ø G	R
	Inital	End force *								
TX 1000	9200	14900	28	50.2	17.5	8	7	20	--	2
TX 2400	24000	38000	45	75.2	21	8	7	28.3	40	2.5
TX 4200	42000	66000	60	95.2	24	8	7	42.4	60	2.5
TX 6600	66300	99000	75	120.2	25.5	8	7	56.6	80	2.5
TX 9500	95000	148000	90	150.2	27.5	8	8	70.7	100	2.5

* At full stroke

We reserve the right to add, delete or modify components without notification.

All dimensions are stated in mm.
All dimensions are nominal unless tolerance is stated.

Dimensions

Model \ Stroke		13	25	38	50	63	75	80	100	125	150	160	175	200	250	300
TX 1000	L	121	145	171	195	221	245	255	295	345	395	415	445	495	595	695
	L min	108	120	133	145	158	170	175	195	220	245	255	270	295	345	395
TX 2400	L	--	160	186	210	236	260	270	310	360	410	430	460	510	610	710
	L min	--	135	148	160	173	185	190	210	235	260	270	285	310	360	410
TX 4200	L	--	170	196	220	246	270	280	320	370	420	440	470	520	620	720
	L min	--	145	158	170	183	195	200	220	245	270	280	295	320	370	420
TX 6600	L	--	190	216	240	266	290	300	340	390	440	460	490	540	640	740
	L min	--	165	178	190	203	215	220	240	265	290	300	315	340	390	440
TX 9500	L	--	205	231	255	281	305	315	355	405	455	475	505	555	655	755
	L min	--	180	193	205	218	230	235	255	280	305	315	330	355	405	455

Basic Information

Pressure medium	Nitrogen
Max. charge pressure	150 bar (at 20° C)
Min. charge pressure	25 bar (at 20° C)
Operating temperature	0 to +80°C
Force increase by temperature	±0.3%/°C
Recommended max strokes/min	~ 15 -100 (at 20° C)
Max piston rod velocity	1.6 m/s
Repair Kit TX 1000	3023788
Repair Kit TX 2400	3022952
Repair Kit TX 4200	3022953
Repair Kit TX 6600	3022954
Repair Kit TX 9500	3022901

Mounting Possibilities

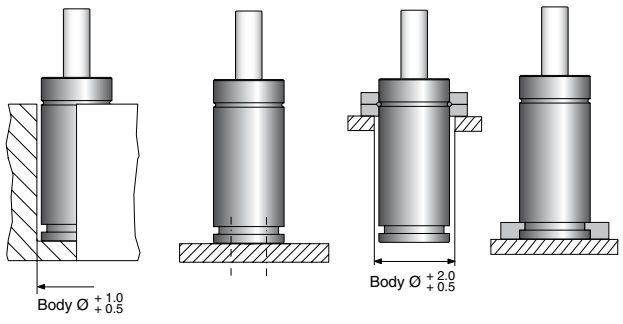

Drop - In | **Bottom Mount** | **Top Mount** | **Foot Mount**

We reserve the right to add, delete or modify components without notification.

All dimensions are stated in mm.
All dimensions are nominal unless tolerance is stated.

KALLER®

The Safer Choice

1 ABOUT THE COMPANY

2 GAS SPRINGS INCLUDING STANDARD MOUNTS

3 SPECIAL MOUNTS

4 GAS LINK SYSTEM

5 PROBLEM SOLVERS AND ACCESSORIES

6 LIFTERS

7 MACHINE AND VEHICLES

8 SERVICE AND MAINTENANCE

9 PIERCING AND FORMING UNITS / CAMS

10 CONTROLLABLE GAS SPRINGS

For more information see our website

www.kaller.com

8200-1137-04 © STRÖMSHOLMEN AB, Printed in Sweden 2010